**Test:** Primary 4 Maths (Term 2) - School RS

**Points:** 95 points

**Name:** ______________________________ **Score:** ____________

**Date:** ______________________________

**Signature:** ______________________________

Select multiple choice answers with a cross or tick:

○ Only select one answer

☐ Can select multiple answers

## Question 1 of 48

Primary 4 Math (Term 2) 2 pts

**Each question carries 2 marks. For each question, four options are given. One of them is the correct answer. Make your choice (A, B, C or D).**

In 87 015, what does the digit '8' stand for?

---

○ **A)** 8 tens
○ **B)** 8 hundreds
○ **C)** 8 thousands
○ **D)** 8 ten thousands

## Question 2 of 48

Primary 4 Math (Term 2) 2 pts

Which of the following is a common multiple of 4 and 6?

---

○ **A)** 36
○ **B)** 32
○ **C)** 28
○ **D)** 18

### Question 3 of 48

Primary 4 Math (Term 2) 2 pts

In _____ / 3 = 140 R2, find the missing number in the blank space.

○ **A)** 418
○ **B)** 420
○ **C)** 422
○ **D)** 426

### Question 4 of 48

Primary 4 Math (Term 2) 2 pts

Johnny paid 6 books of the same price for $228. What was the cost of 2 such books?

○ **A)** $19
○ **B)** $38
○ **C)** $76
○ **D)** $114

### Question 5 of 48

Primary 4 Math (Term 2) 2 pts

Paul revised for a test from 7.35 p.m. to 9.15 p.m. yesterday. How long did he revise for the test?

○ **A)** 1h 50 min
○ **B)** 1h 40 min
○ **C)** 1h 20 min
○ **D)** 1h 10 min

### Question 6 of 48

Primary 4 Math (Term 2) 2 pts

In the number line below, what is the number indicated by the arrow?

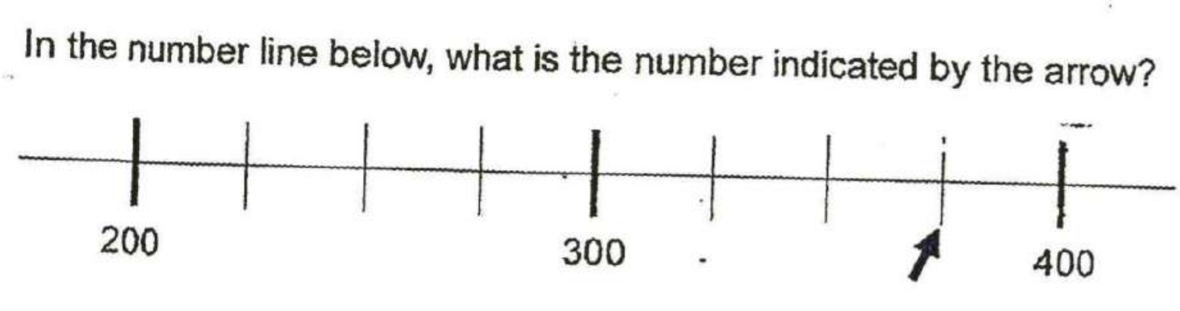
In the number line below, what is the number indicated by the arrow?
200
300
400

○ **A)** 330
○ **B)** 360
○ **C)** 375
○ **D)** 380

**Question 7 of 48** Primary 4 Math (Term 2) 2 pts

The figure is not drawn to scale. Name the marked angle of $120^o$.

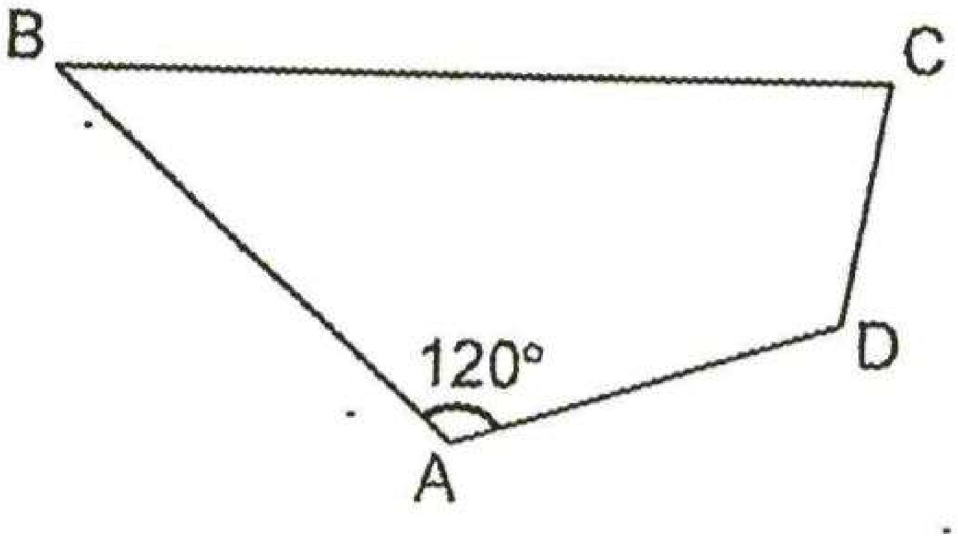

○ **A)** Angle ABC

○ **B)** Angle ADC

○ **C)** Angle BCD

○ **D)** Angle DAB

**Question 8 of 48** Primary 4 Math (Term 2) 2 pts

ABCD is formed by three identical rectangles.
Which of the following is NOT true?

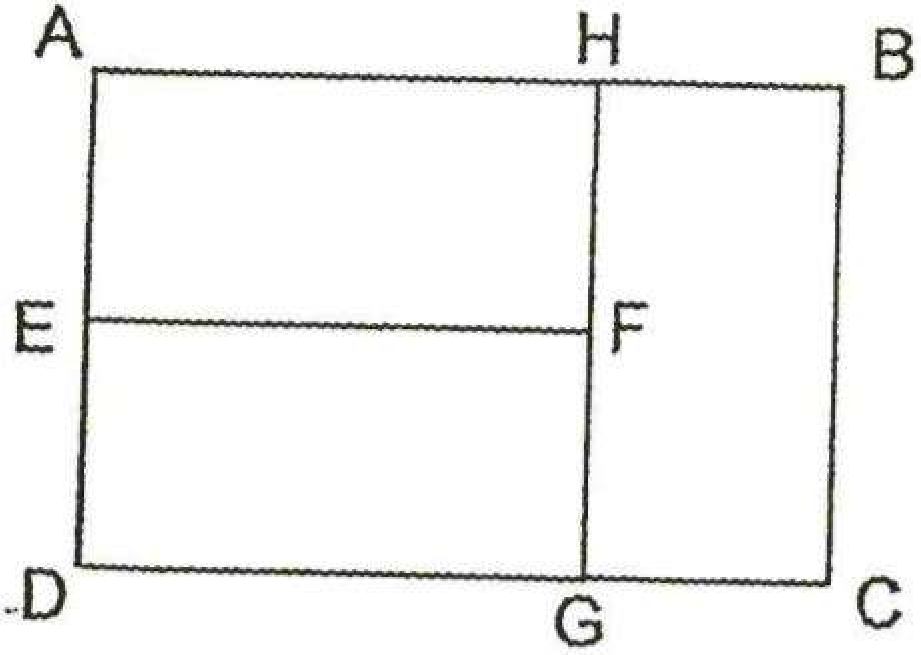

○ **A)** EF = GH
○ **B)** AE = GC
○ **C)** AB = HB + BC
○ **D)** ABCD is a square.

**Question 9 of 48** Primary 4 Math (Term 2) 2 pts

In 85 905, what is the product of the two values of the digit '5'?

○ **A)** 25
○ **B)** 250
○ **C)** 2500
○ **D)** 25 000

**Question 10 of 48** Primary 4 Math (Term 2) 2 pts

Lynn collected 98 stamps weekly for 26 weeks.
How many stamps did she collect in total?
Round off your answer to the nearest hundred.

○ **A)** 3000
○ **B)** 2600
○ **C)** 2500
○ **D)** 2400

## Question 11 of 48

Primary 4 Math (Term 2) 2 pts

Six angles are marked in the figure below. How many of them are larger than a right angle?

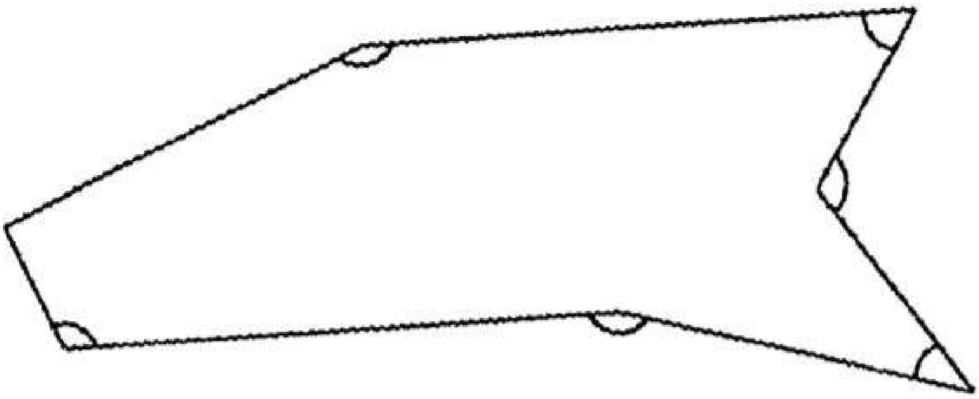

○ **A)** 5
○ **B)** 6
○ **C)** 3
○ **D)** 4

## Question 12 of 48

Primary 4 Math (Term 2) 2 pts

In the figure below, ABCD is a square and Angle m = Angle n. Find Angle n.

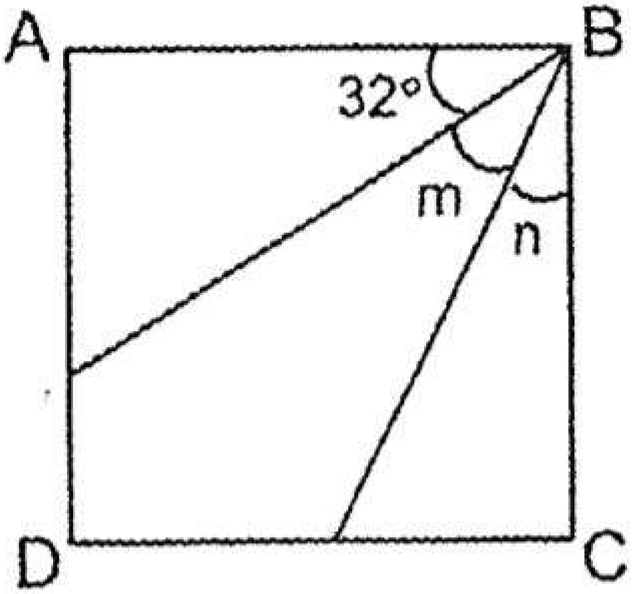

○ **A)** 16°
○ **B)** 29°
○ **C)** 32°
○ **D)** 58°

## Question 13 of 48 Primary 4 Math (Term 2) 2 pts

Peter is standing at centre A according to the 8-point compass below.

After making a 1/4 turn clockwise and then turning $315^{O}$ in the anticlockwise direction, Peter finds himself facing the South.
At which direction is Peter facing at first?

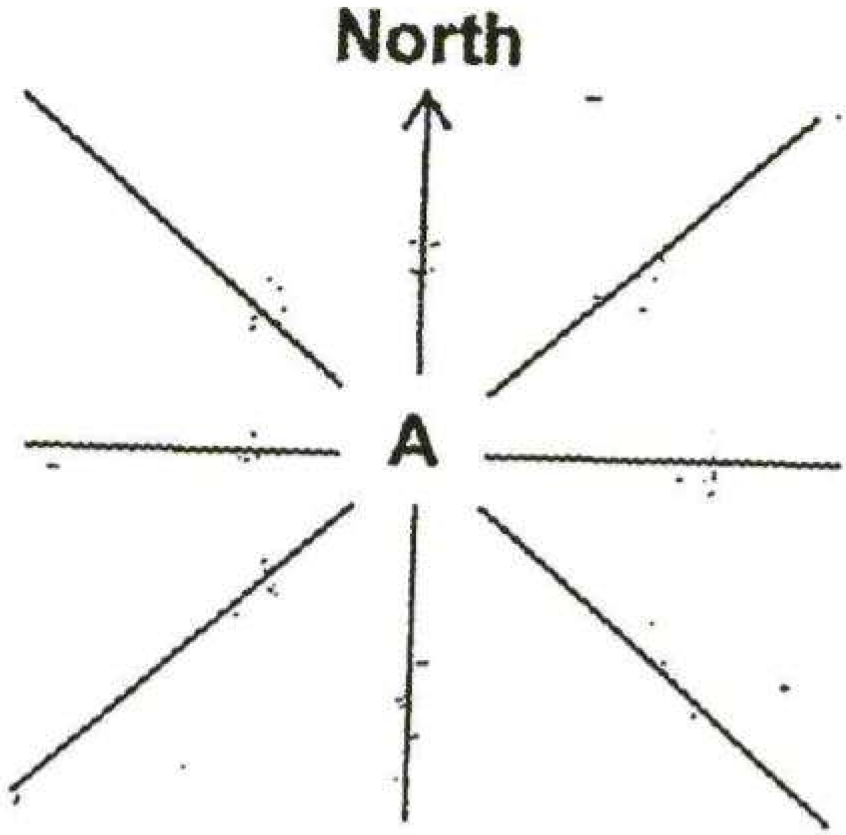

---

○ **A)** East
○ **B)** West
○ **C)** North - East
○ **D)** North - West

The figure is made up of a rectangle and a square. Find the perimeter of the figure.

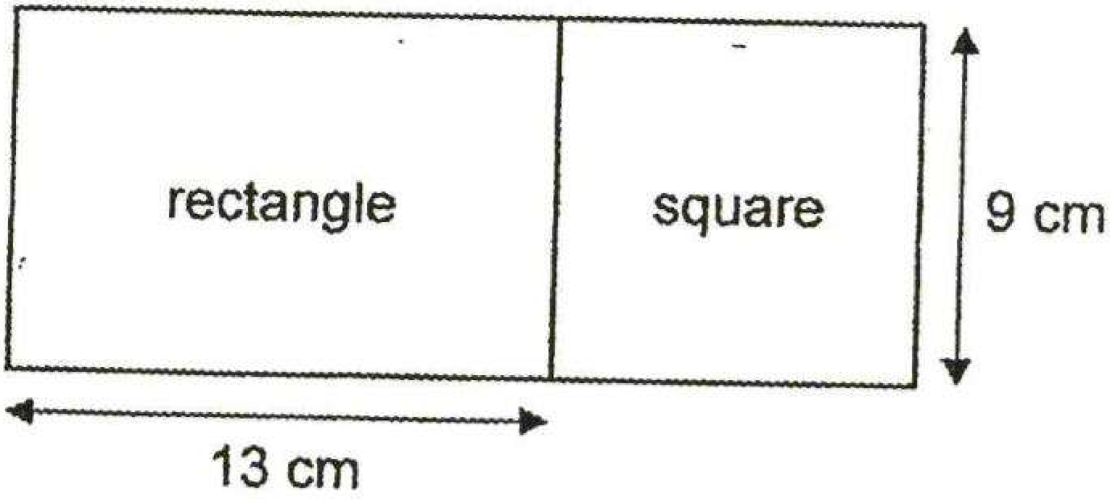
rectangle
square
9 cm
13 cm

---

- ○ **A)** 53 cm
- ○ **B)** 62 cm
- ○ **C)** 71 cm
- ○ **D)** 80 cm

## Question 15 of 48

Primary 4 Math (Term 2) 2 pts

The figure below is made up of 2 identical squares and a shaded rectangle.
Find the area of the shaded rectangle.

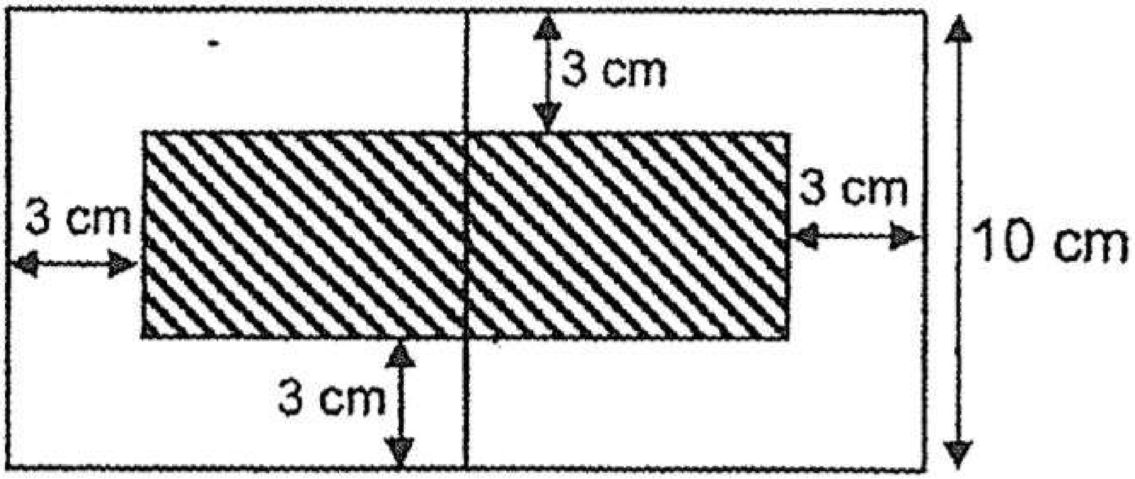

---

- ○ **A)** 56 $\text{cm}^2$
- ○ **B)** 84 $\text{cm}^2$
- ○ **C)** 119 $\text{cm}^2$
- ○ **D)** 182 $\text{cm}^2$

## Question 16 of 48

Primary 4 Math (Term 2) 2 pts

The following display is a notice of the visiting hours of Happy Hospital.

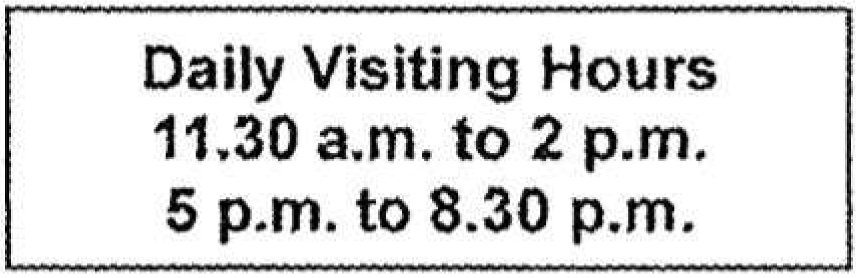

**Daily Visiting Hours**
**11.30 a.m. to 2 p.m.**
**5 p.m. to 8.30 p.m.**

How long is Happy Hospital open for visiting daily?

---

- ○ **A)** 2h 30 min
- ○ **B)** 3h 30 min
- ○ **C)** 6h
- ○ **D)** 9h

The figure is made up of 6 identical rectangles.
The perimeter of the figure is 72 cm. Find the perimeter of one rectangle.

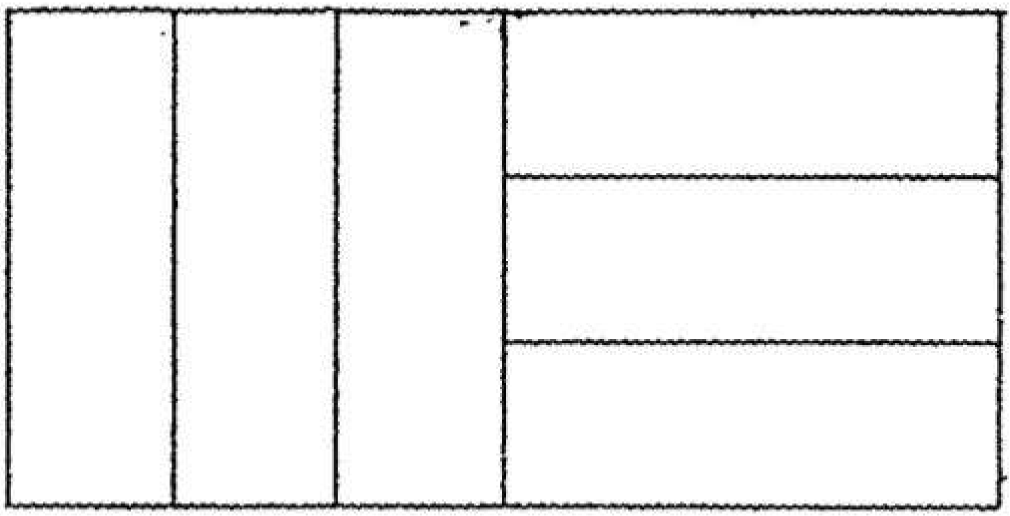

- ○ **A)** 12 cm
- ○ **B)** 18 cm
- ○ **C)** 24 cm
- ○ **D)** 32 cm

## Question 18 of 48

Primary 4 Math (Term 2) 2 pts

The figure is made up of three identical squares overlapping each other as shown. Each overlapped part is a rectangle as shaded and the area of each shaded rectangle is 15 $cm^2$. Find the total area of the **unshaded** parts.

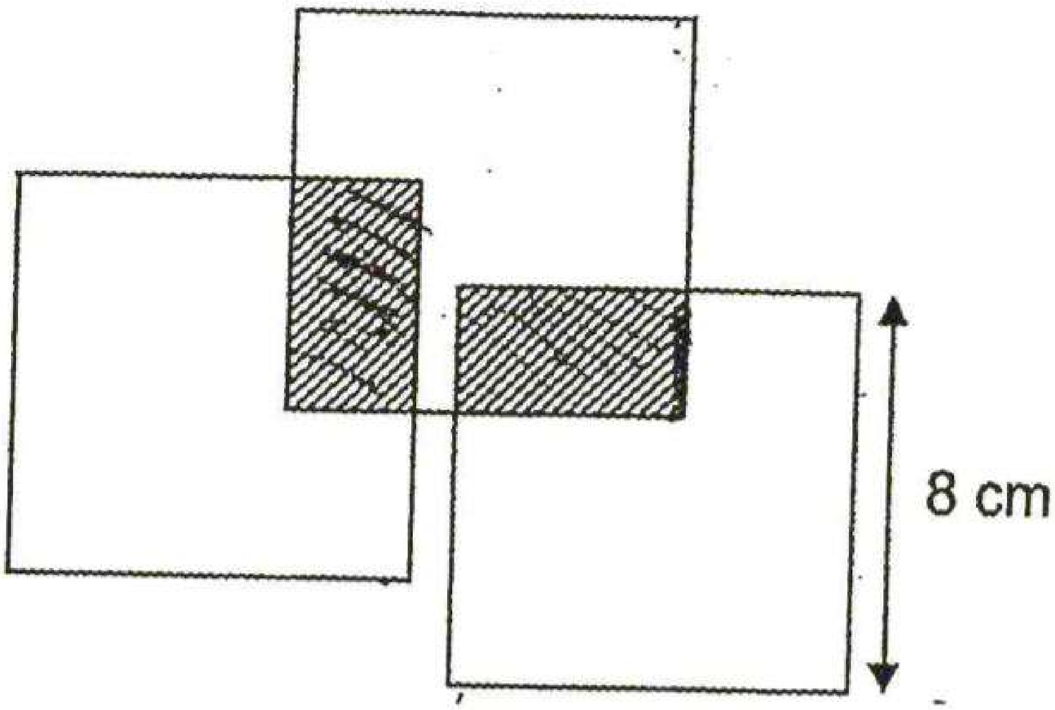

○ **A)** 117 $cm^2$

○ **B)** 132 $cm^2$

○ **C)** 147 $cm^2$

○ **D)** 162 $cm^2$

## Question 19 of 48

Primary 4 Math (Term 2) 2 pts

The figure is formed by two identical squares. Some straight lines are drawn inside the figure. Find the value of Angle a + Angle b + Angle c.

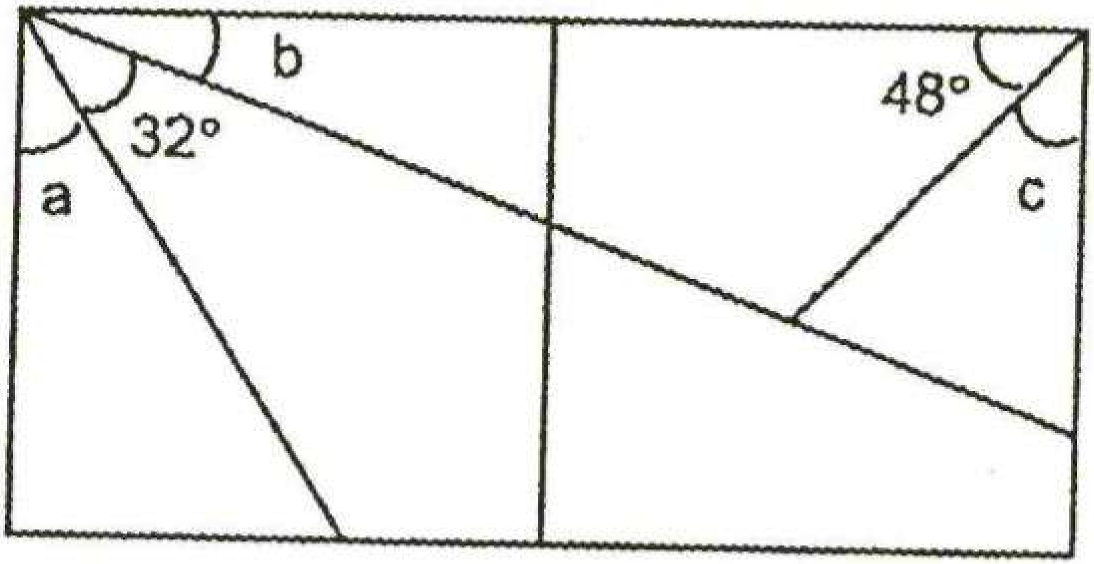

---

○ **A)** 100$^{o}$

○ **B)** 106$^{o}$

○ **C)** 138$^{O}$

○ **D)** 144$^{o}$

## Question 20 of 48

Primary 4 Math (Term 2) 2 pts

When Ben is 8 years olf, Charles is three times as old as Ben and 4 years older than Daniel. If Daniel is 50 years old, how old is Ben?

---

○ **A)** 18

○ **B)** 34

○ **C)** 38

○ **D)** 46

## Question 21 of 48

Primary 4 Math (Term 2) 1 pt

**Show your workings clearly for each question and write your answers in the spaces provided. For questions which require units, give your answers in the units stated.**

Find the product of 145 and 70.

## Question 22 of 48

Primary 4 Math (Term 2) 1 pt

Write sixty thousand, one hundred and twenty in numerals.

## Question 23 of 48

Primary 4 Math (Term 2) 1 pt

In 7 ten thousands + 5 hundreds, what is value of the largest digit?

## Question 24 of 48

Primary 4 Math (Term 2) 1 pt

Study the shapes below.
Which shape(s) has/have all the properties of a rectangle?

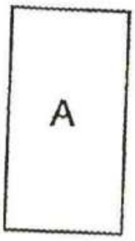

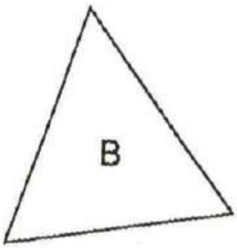

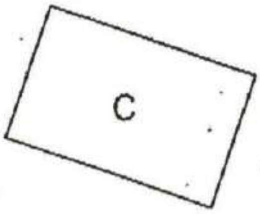

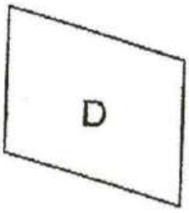

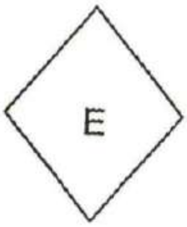

Ans: _____ and _____

**Question 25 of 48** Primary 4 Math (Term 2) 1 pt

The figure below is a rectangle. Find its perimeter.

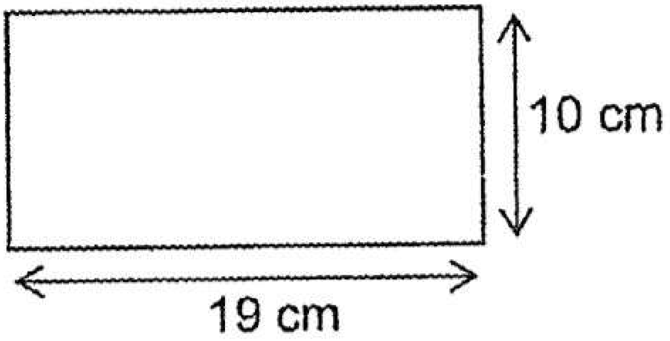

Ans: ____ cm

---

**Question 26 of 48** Primary 4 Math (Term 2) 1 pt

The square grid below shows four positions on a map.
In which direction is D from B?

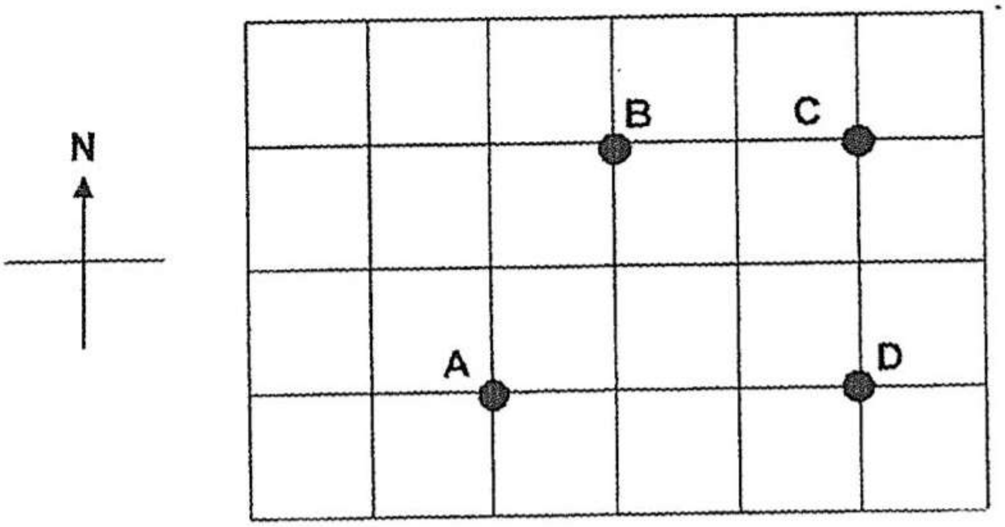

Use the given protractor and complete the drawing of ∠ABC = 106°.

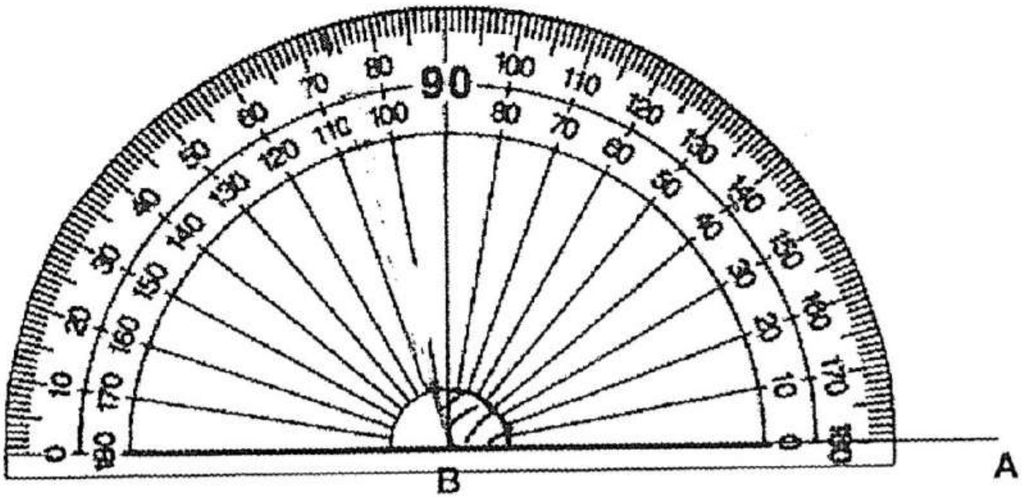

*This question is designed for extended answers that parent/ teacher will have to assign and guide child to attempt after the test has been completed.*

*Grading: This question type is not graded on this system and will not affect the final score as it was designed in such a way that it requires manual assistance.*

***Please put "Done" in the question space below in order to proceed to the next question***

## Question 28 of 48

Primary 4 Math (Term 2) 0 pts

Use the dotted line to complete the drawing of square ABCD with side AB given.

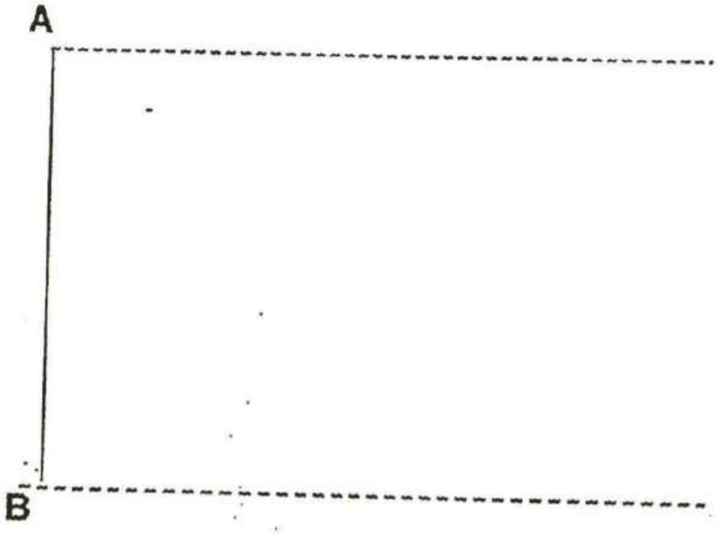

*This question is designed for extended answers that parent/ teacher will have to assign and guide child to attempt after the test has been completed.*

*Grading: This question type is not graded on this system and will not affect the final score as it was designed in such a way that it requires manual assistance.*

***Please put "Done" in the question space below in order to proceed to the next question***

The figure is made up of 3 identical squares. Find its area.

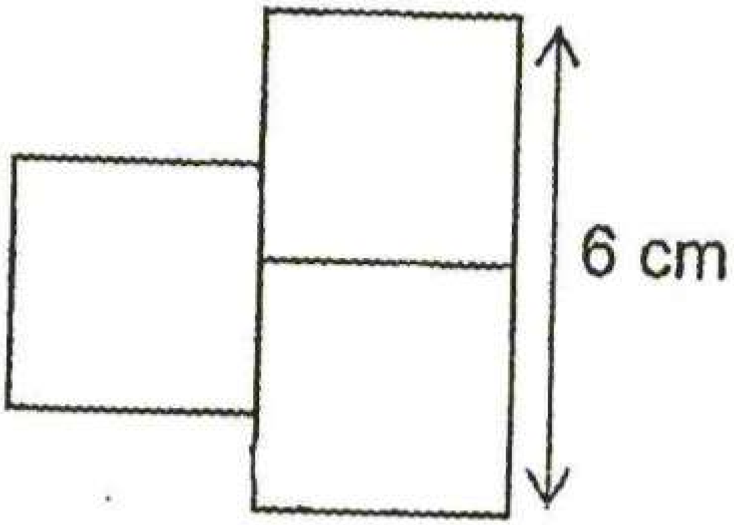

Ans: _____ cm

## Question 30 of 48

Primary 4 Math (Term 2) 0 pts

Draw two straights line to join the three dots to form the smallest angle. Measure this angle with a protractor and write its value in the answer space.

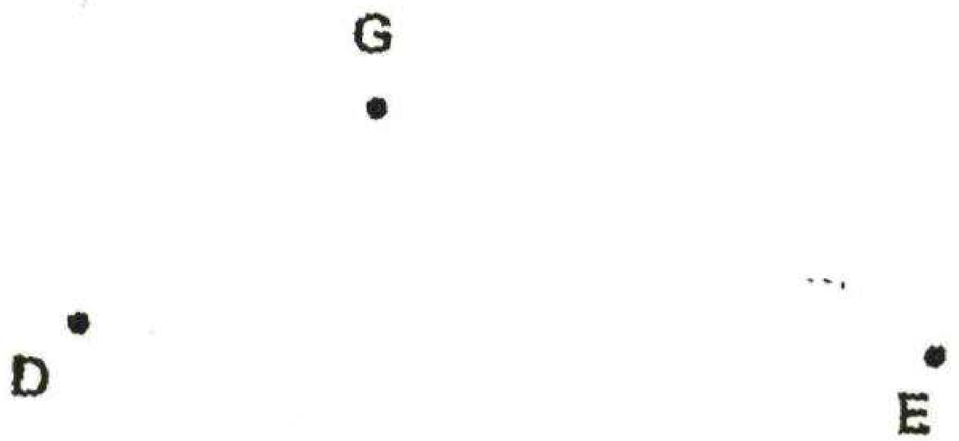

*This question is designed for extended answers that parent/ teacher will have to assign and guide child to attempt after the test has been completed.*

*Grading: This question type is not graded on this system and will not affect the final score as it was designed in such a way that it requires manual assistance.*

***Please put "Done" in the question space below in order to proceed to the next question***

---

## Question 31 of 48

Primary 4 Math (Term 2) 2 pts

Find the sum of all the common factors of 12 and 16.

A piece of wire of 50 cm is just enough to form the rectangle below.
What is the area of the rectangle?

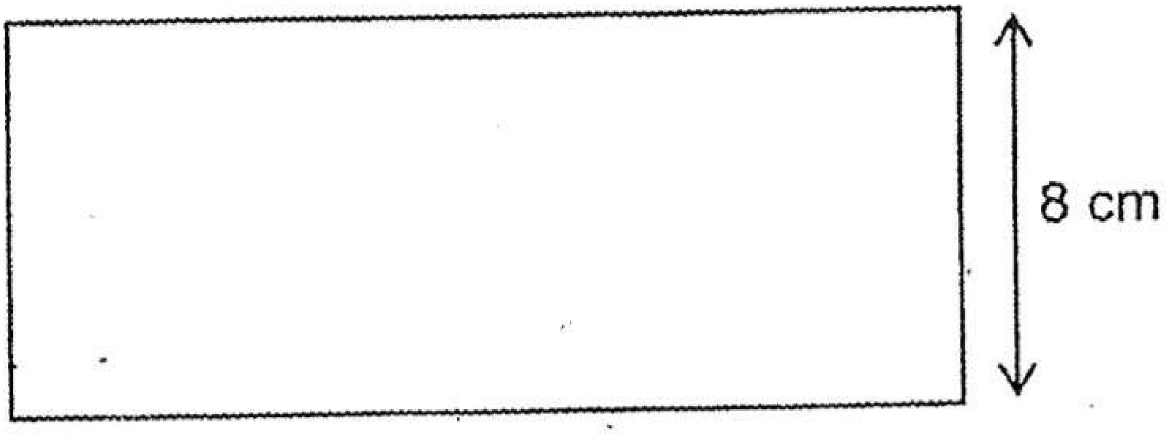

Ans: ___ cm

Complete drawing the rectangle with the given lines.

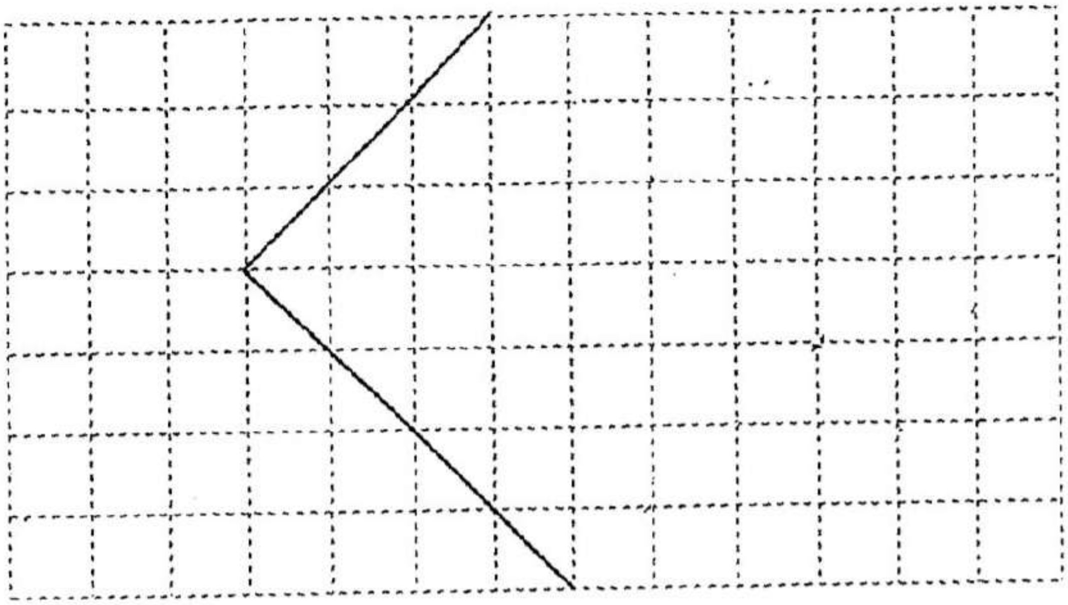

*This question is designed for extended answers that parent/ teacher will have to assign and guide child to attempt after the test has been completed.*

*Grading: This question type is not graded on this system and will not affect the final score as it was designed in such a way that it requires manual assistance.*

***Please put "Done" in the question space below in order to proceed to the next question***

## Question 34 of 48

Primary 4 Math (Term 2) 2 pts

The bar graph below shows the number of people who attended a concert. How many people attended the concert?

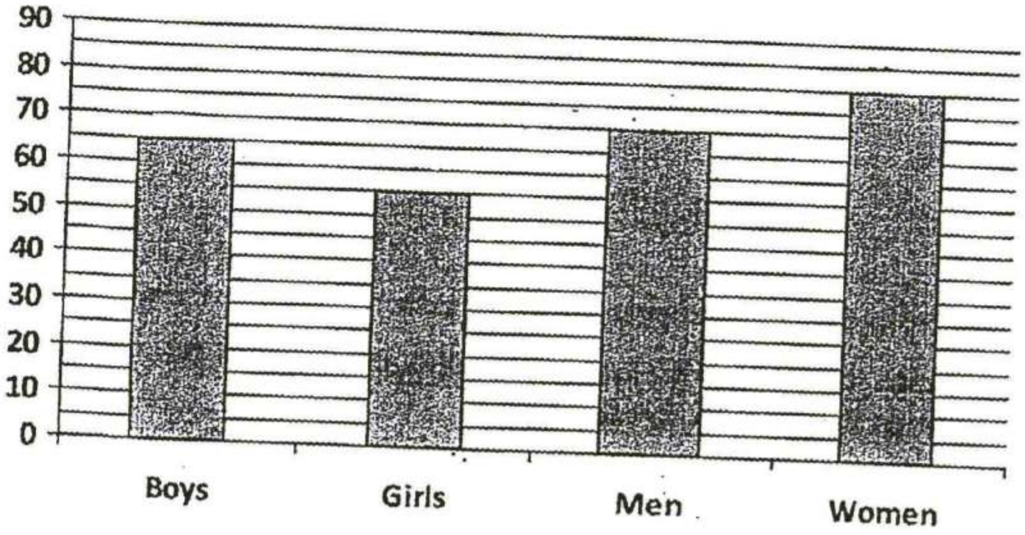

## Question 35 of 48

Primary 4 Math (Term 2) 2 pts

Study the number pattern. Find the sum of the next two missing numbers.

9660, 9510, 9360, 9210, ______, ______, 8760, .........

## Question 36 of 48

Primary 4 Math (Term 2) 2 pts

Kim brought $100 to buy fruit tarts. She paid $7 for 3 fruit tarts.
What was the greatest number of fruit tarts that she could buy?

The figure below is made up of three squares. What is length AB?

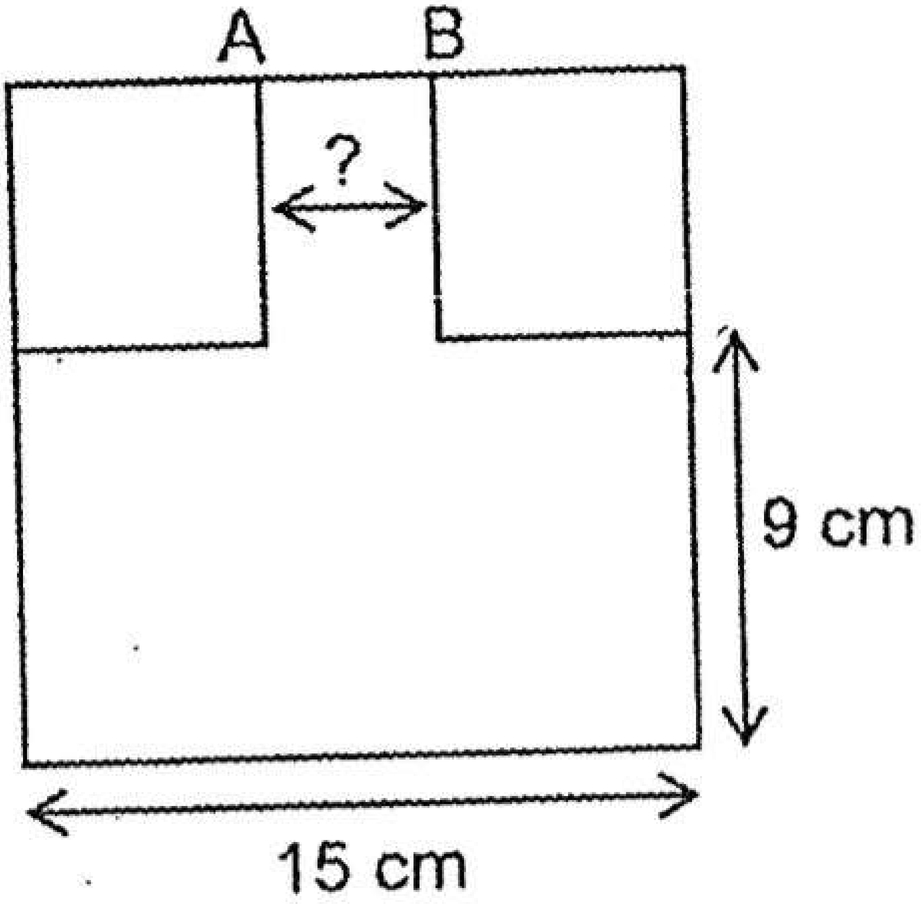

Ans: _____ cm

### Question 38 of 48

Primary 4 Math (Term 2) 2 pts

The figure below is a rectangular card. At most, how many squares of side 3 cm can be cut from this card?

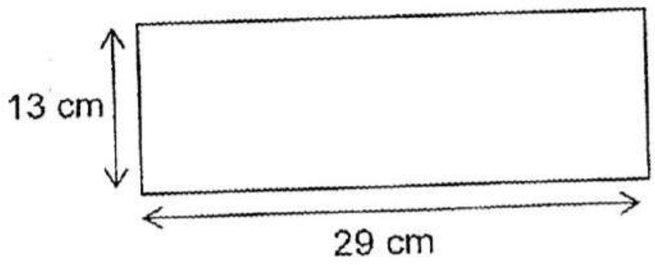

---

### Question 39 of 48

Primary 4 Math (Term 2) 2 pts

The figure is made up of two identical rectangles overlapping each other.
Find the perimeter of the figure.

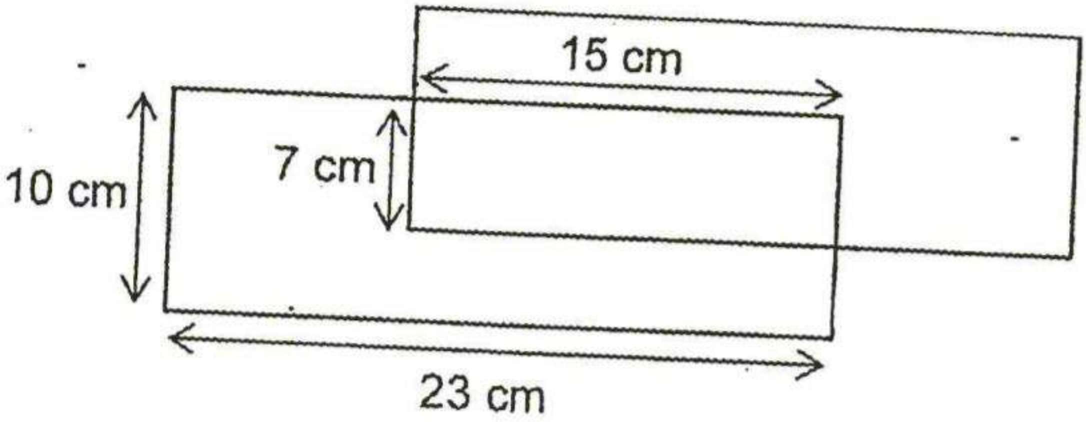

Ans: _____ cm

### Question 40 of 48

Primary 4 Math (Term 2) 2 pts

Lynn bought some chocolate and durian cupcakes for $180. Each chocolate cupcake cost $1 and each durian cupcake cost $5. She bought an equal number of the two types of cupcakes. How many cupcakes did she buy altogether?

### Question 41 of 48

Primary 4 Math (Term 2) 3 pts

Mr Lim bought 3900 g of soil. He poured all the soil equally into 5 pots. The mass of each empty pot is 750 g. Find the mass of each pot with the soil.

Ans: _____ g

### Question 42 of 48

Primary 4 Math (Term 2) 3 pts

Peter had 15 identical containers. He filled 700 ml of water into each of the first 8 containers and twice as much water into each of the remaining containers.
How much water did he use altogether?

Ans: ______ ml

The bar graph below shows the number of books donated for 4 months but the number for April was missing. The total number of books donated from January to April was 1200. What was the greatest difference in the number of books donated in any 2 months? Give your answer to the nearest 10.

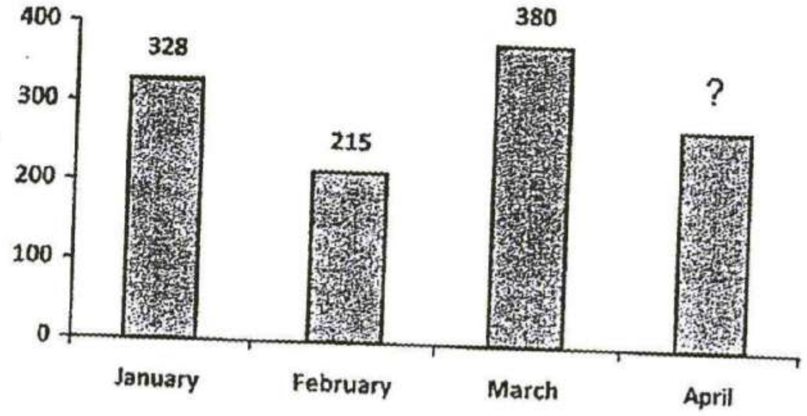

## Question 44 of 48

Primary 4 Math (Term 2) 4 pts

In the figure, a picture measuring 17 cm by 17 cm has a border of 4 cm around it. Find the area of the border.

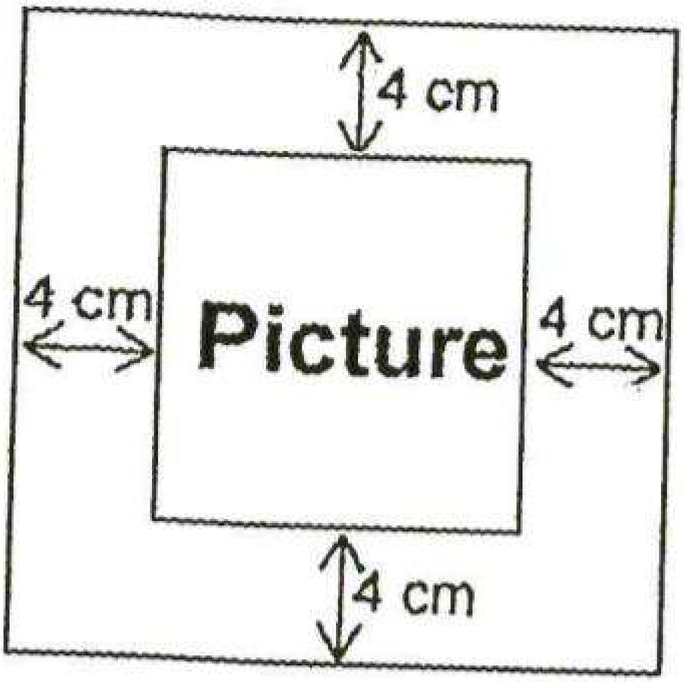

## Question 45 of 48

Primary 4 Math (Term 2) 4 pts

In a hall, there are 85 rows of chairs and each row has 24 chairs. Two of these rows of chairs are brought into an empty classroom and to be re-arranged into rows of 8. How many rows are there in the classroom now?

## Question 46 of 48

Primary 4 Math (Term 2) 4 pts

The total length of 3 sticks is 3 m. The first stick has the same length as the second stick.
The third stick is 24 cm longer than the first stick.
What is the total length of the first stick and third stick?

**Question 47 of 48** Primary 4 Math (Term 2) 4 pts

A square piece of paper is folded along the dotted lines to form 2 identical rectangles and 3 identical squares as shown in the figure below. The area of 1 square is 36 $cm^2$. Find the area of 1 rectangle.

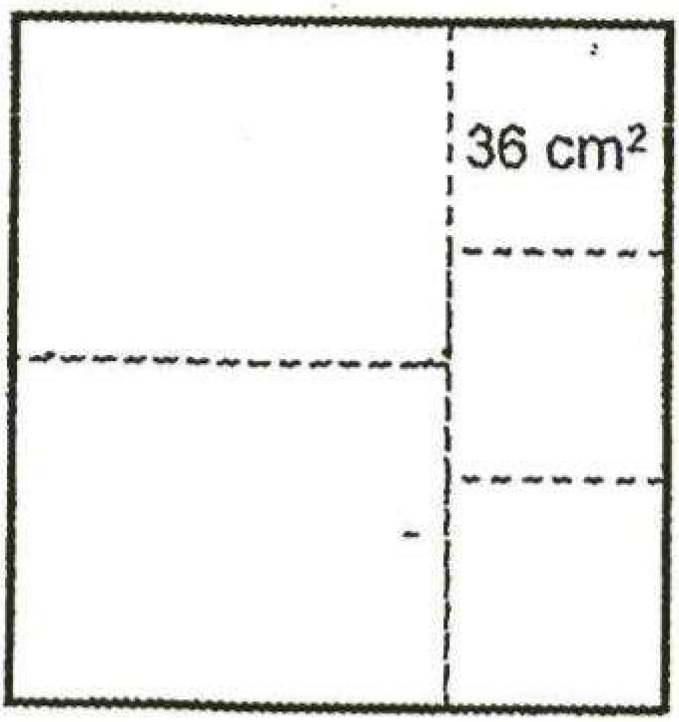

---

**Question 48 of 48** Primary 4 Math (Term 2) 4 pts

Jason had three times as many red marbles as blue marbles. During a game, he lost 38 red marbles and won another 44 blue marbles. He then had the same number of red and blue marbles. How many red marbles did he have after the game?